Total Hours = 120

# CES ACES Concentration
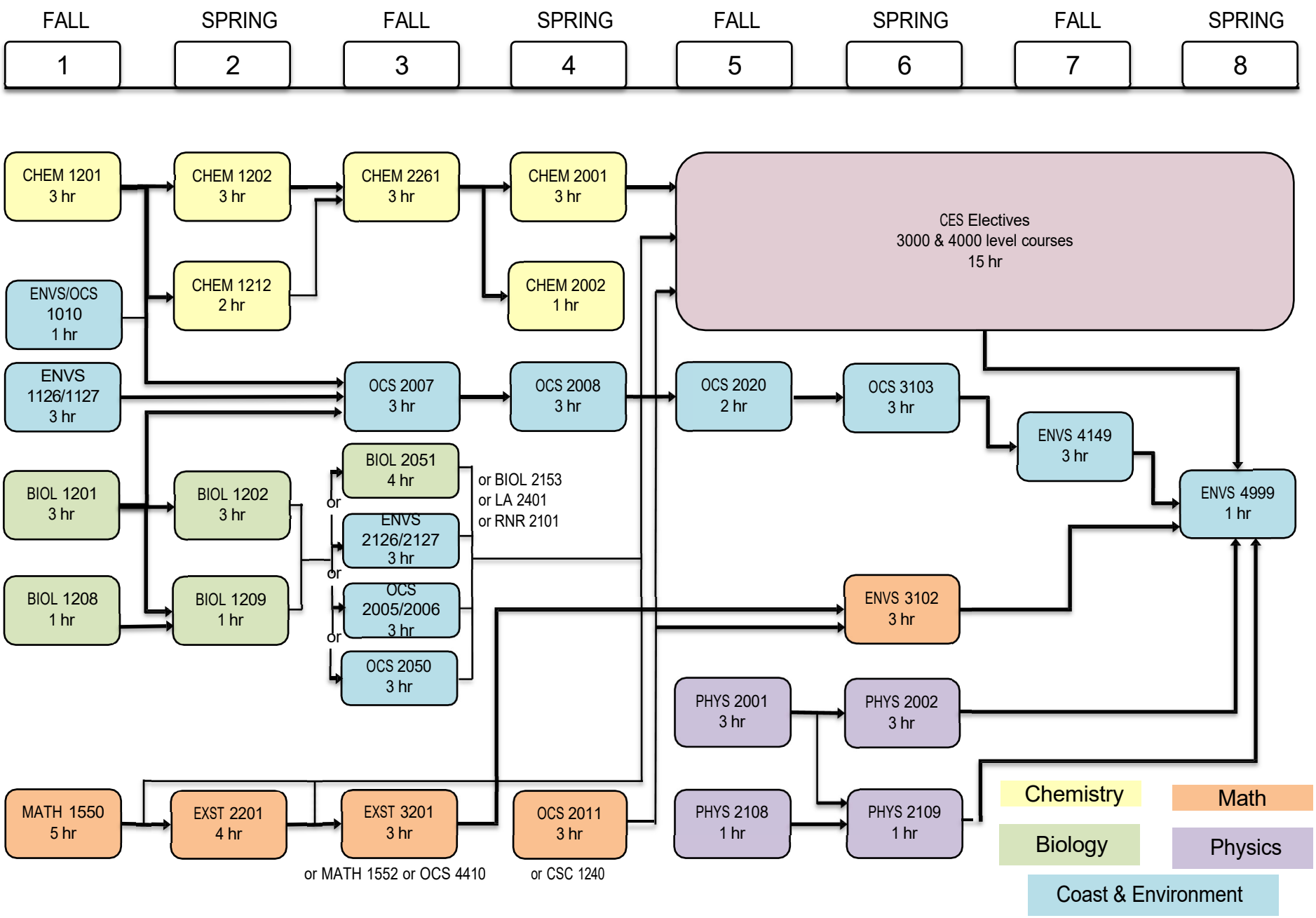
2024-2025